(**)Maximum welded steel carbon, Phosphorus or Sulphur content :
C<0,23% ; S < 0,025% ; P<0,03% ; CE<0,45

* MINIMUM LENGTH OF THE POWER CABLE = 3 mt

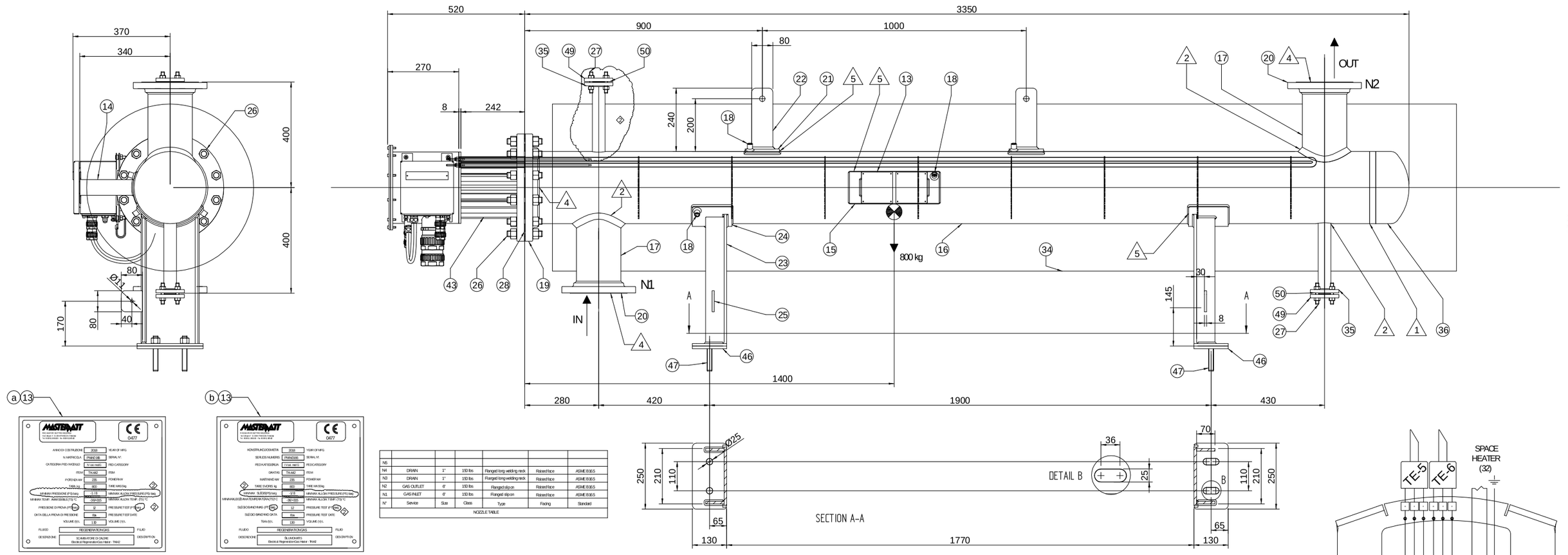

N5						
N4	DRAIN	1"	150 lbs	Flanged long welding neck	Raised face	ASME B16.5
N3	DRAIN	1"	150 lbs	Flanged long welding neck	Raised face	ASME B16.5
N2	CAS OUTLET	6"	150 lbs	Flanged slip on	Raised face	ASME B16.5
N1	CAS INLET	6"	150 lbs	Flanged slip on	Raised face	ASME B16.5
N°	Service	Size	Class	Type	Facing	Standard

NOZZLE TABLE

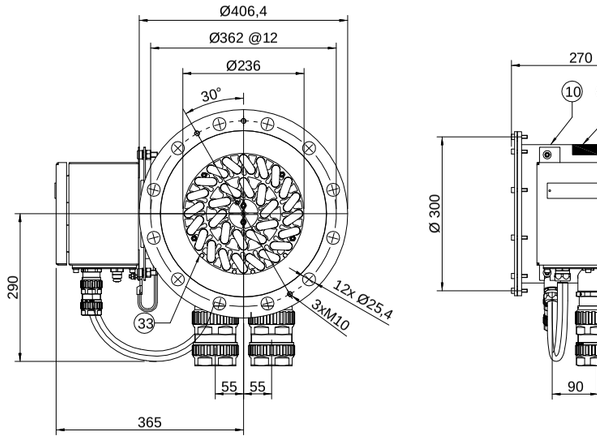

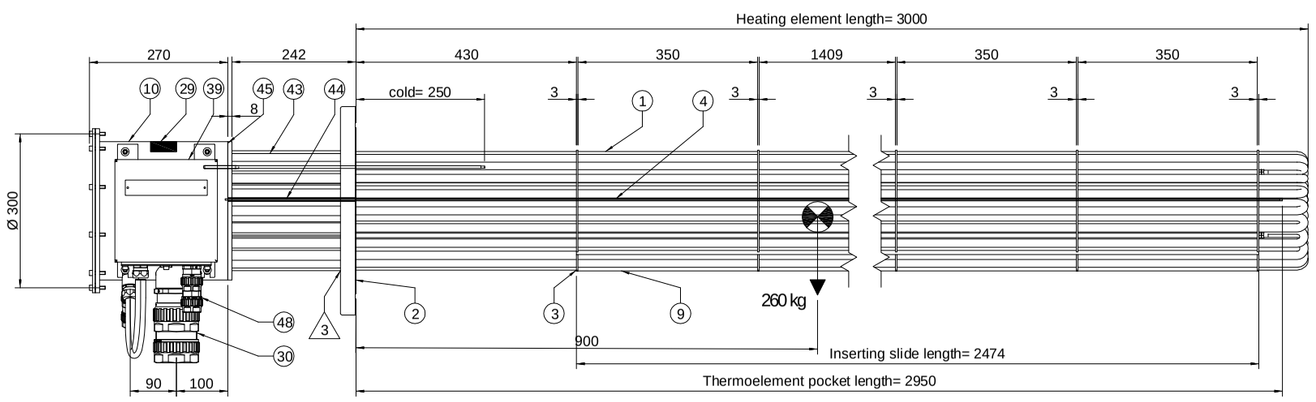

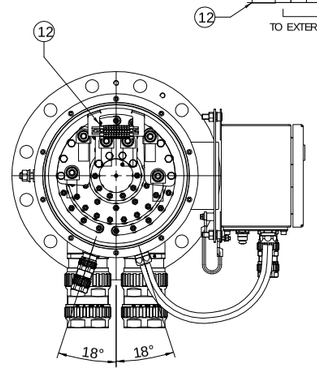

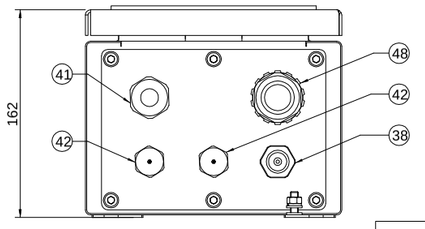

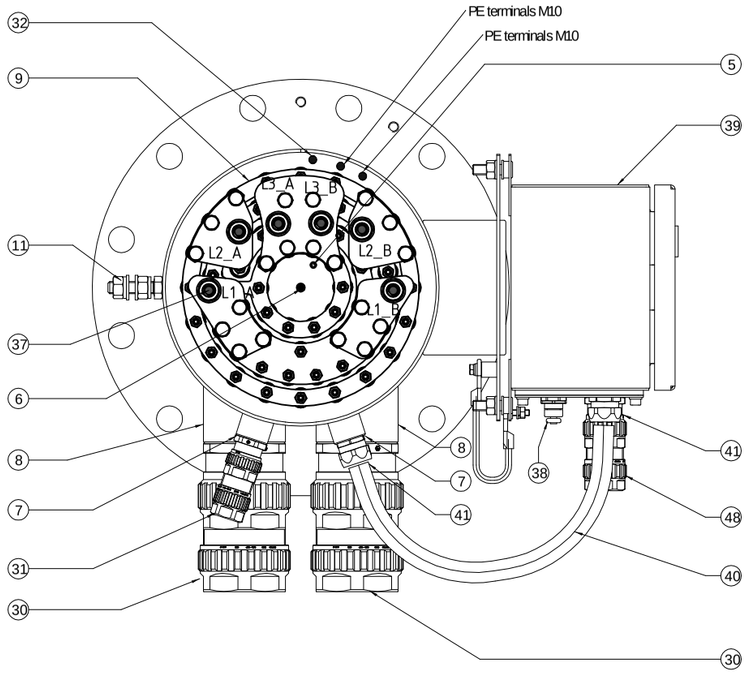

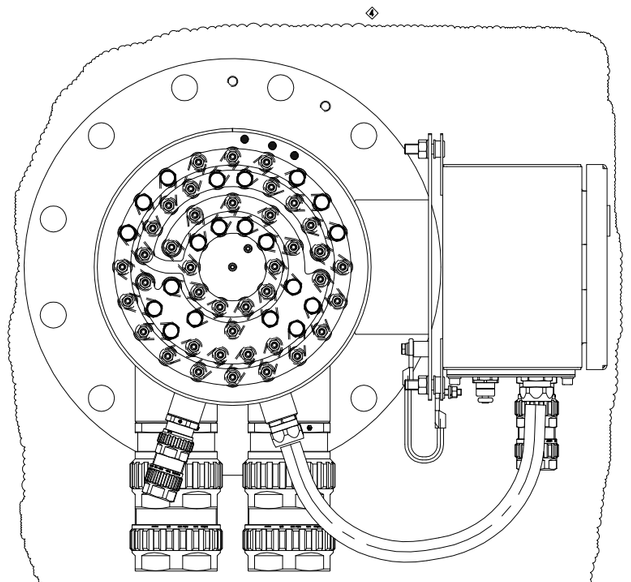

ELECTRICAL CONNECTION DETAIL

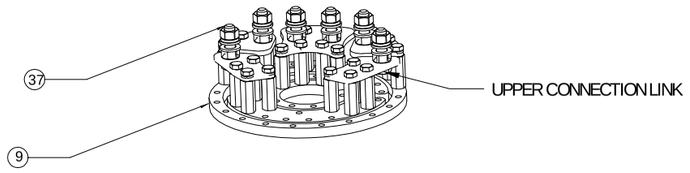

WIRING DIAGRAM

Junction box with :
_ hinged
_ internal removible plate
_ removible glands plate
_ locking device
_ PE bar

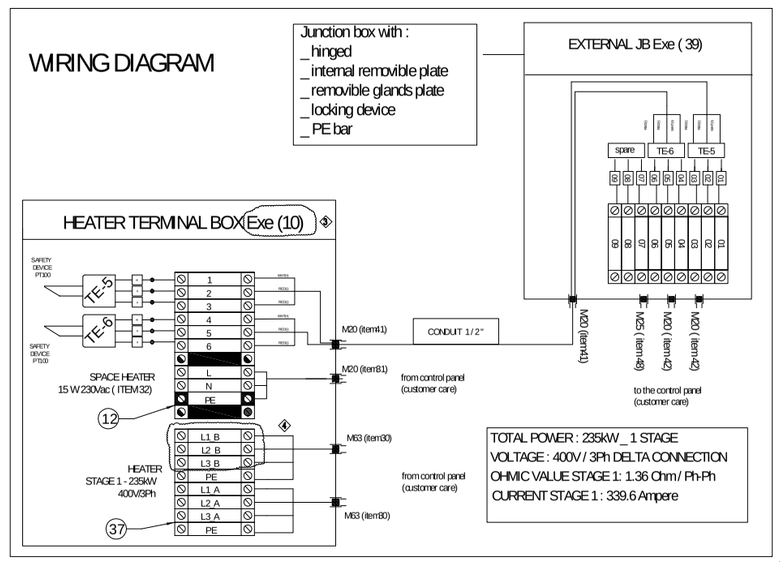

After having connected all the nozzle flanges, a seal-tight insulation shell be installed which exchanges no air with the external environment. This insulation shall be sized in order to insure that the temperature at the external insulation surface facing the explosive environment never exceeds 195 °C. This is a mandatory requirement; if this requirement is not satisfied THE ATEX CLASSIFICATION T3 OF THE SYSTEM IS NULL AND VOID

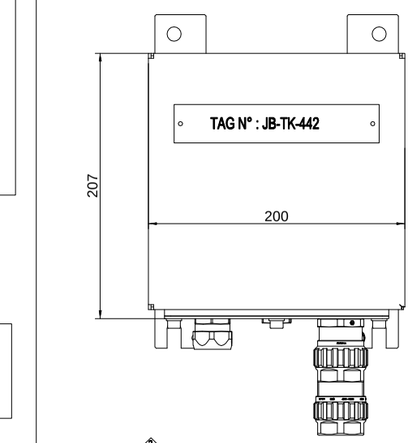

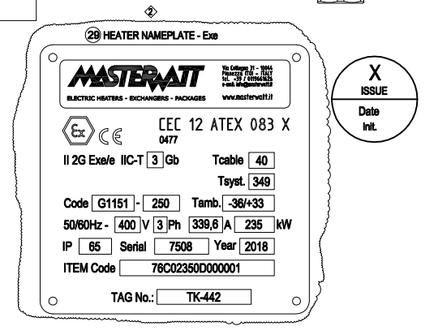

POS	DESCRIPTION	QTY	MATERIAL	DIMENSIONS
50	GASKET (spec. sheet22000038)	2	SS304 / GRAPHITE	for flange 1" 150 lbs RF
49	BLIND FLANGE (ASME B16.5)	2	ASTM A350 LF2 (**)	1" 150lbs RF
48	CABLE GLAND FOR ANN. CABLE, INTERNAL SEAL 11-15 mm, OUTLET SEAL 15-34mm	1	NICKEL PLATED	M25 ATEX Ex-d
47	ANCHOR BOLT (customer care)	4		SIZE M24
46	SADDLE COUNTER PLATE	2	S355 J2	Thk. 10 mm
45	SUPERIOR FLANGE	1	AISI 316	Thk. 20 mm
44	THERMOELEMENT POCKET DISTANCING PIPE	2	SA 312 TP316L	Ø 6 x 5.7 Ml.
43	HEATING ELEMENT DISTANCING PIPE	80	SA 213 TP 316L	Ø10 x 1.2 Ml.
42	PLUG	2	AISI 316	M30
41	CONDUIT FITTING EAG Ex	3	Ni plated brass	M20
40	CONDUIT NYV BLACK	BEST	/	size 1/2"
39	EXTERNAL JB EX-db IIB + H2 T3 IP66	1	AISI 316	550 200x200x160
38	BREATHER DRAIN	1	AISI 316	M20
37	POWER CONNECTION	6	BRASS	BOLT M12
36	CAP	1	AISI 304L	10" SCH.40
35	VENT/ DRAIN FLANGE	2	ASTM A350 LF2(**)	1" 150 lb L.WN RF
34	INSULATION (at customer care)	1	ROCK WOOL	t= 100 mm + 0*10 PLATE
33	INSERTING SLID	4	AISI 316	Ø 8mm
32	SPACE HEATER	1	-	15 W 230 V / 1Ph
31	CABLE GLAND FOR ANN. CABLE, INTERNAL SEAL 6-13 mm, OUTLET SEAL 10-16mm	1	NICKEL PLATED	M20 ATEX Ex-d
30	CABLE GLAND FOR ANN. CABLE, INTERNAL SEAL 26-45mm, OUTLET SEAL 43-80mm (*)	3	NICKEL PLATED	M50 ATEX Ex-d
29	HEATER NAME PLATE	1	AISI 316	Thk. 1mm
28	SPIRAL WOUND GASKET (see above)	1	GRAPHITE/SS304	s 1/8" 150 lb FLANGE
27	STUD BOLT / EXPANSIONAL NUT (spec. SHC22000038)	8	ASTM A193/A194 Gr B8/2H	L=120mm
26	STUD BOLT / EXPANSIONAL NUT (spec. SHC22000038)	12	ASTM A193/A194 Gr B8/2H	L=120mm
25	HEATER EXCHENGER EARTHING PLATE	2	AISI316	Thk 8 mm
24	SADDLE REINFORCE	2	FE360B	Thk 10 mm
23	SADDLE	2	S355 J2	Thk. 10 mm
22	LIFTING LUG	2	S235 JR	Thk 10 mm
21	LUG REINFORCEMENT	2	FE360B	Thk. 10 mm
20	INLET / OUTLET FLANGE (V1-N2)	2	ASTM A350 LF2(**)	ANSI B16.5 1" 150 lb SO RF
19	MAIN FLANGE	1	ASTM A350 LF2(**)	ANSI B16.5 10" 150 lb SO RF
18	THREADED COUPLING (by hydrotest)	5	AISI 316	1/8" NPT
17	INLET / OUTLET PIPE	2	A333 Gr.6 (**)	6" SCH. 80 ,Thk 10,97
16	SHELL	1	A333 Gr.6 (**)	10" SCH. 40, Thk 10,30
15	NAME PLATE SUPPORTO REINFORCE	1	FE360 B1	Thk. 10 mm
14	NAME PLATE SUPPORT	1	S355 J2 G0	Thk. 3 mm
13	EXCHANGER NAME PLATE	1	AISI 316	Thk. 1 mm
12	HEATER CONTACT BOX TERMINAL BOARD	BEST	/	2.5 mm² terminals
11	EARTH CONNECTION	1	AISI304	SCREW M12x50 + NUT M12
10	Exe HEATER (CONTACT BOX)	1	AISI 316	SIZE 250 - IP66
9	CONNECTION LINKS	BEST	BRASS	6 x 2 x 16 - section 192 mm²
8	THREADED COUPLING	2	AISI 316	NOZZLE MB1 X L3
7	THREADED COUPLING	2	AISI 316	NOZZLE MD2 X L3
6	THERMORESISTANCE PT100 (3-wires) - FLUID OVER_T° CONTROL - SET POINT = 340°C	1	N/A	Ex-ia SIL1 certificate
5	THERMORESISTANCE PT100 (3-wires) - SHEATH OVER_T° CONTROL - SET POINT = 470°C	1	N/A	Ex-ia SIL1 certificate
4	THERMOELEMENT POCKET	2	AISI316	Ø8 Thk. 1,1 x 2550 mm
3	SPECIAL BAFFLE (Ø40 mm doughnut)	8	AISI316	S355 Thk. 3mm
2	HEATER BLIND FLANGE	1	ASTM A350 LF2	10" ANSI 150lb RF
1	HEATING ELEMENT 7650 W 230V - 3,9 W/cm²	30	AISI321	Ø 10mm

LIST OF PART

N5	-	-	-	-	-	-	-
N4	-	-	-	-	-	-	-
N3	-	-	-	-	-	-	-
N2	6STD	6STD	200F	300	300	40ST	
N1	6STD	6STD	200F	300	300	40ST	
NOZZLE	VC.DN	VL.DN	P.DN	HC.Dimd	HL.Dimd	HT.Dimd	

NOZZLE FLEXIBILITY (based on internal pressure and external loads)

DESIGN CODE	EN 13445	SHELL / HOLES DIAMETAL DIAMETER	see drawing flange
DESIGN NOT CONSIDERED	L, SEISMIC, WIND, Q	TUBE SHEET / BRANCH ATTACHMENT	see drawing flange
PRESS CONSIDERED	HL, Hmax, W	NOZ. NOT CONSIDERED	CONSIDERED
JACKETS / TRACES	1	DESIGN WITH FILLER	see drawing
PE / V	1/0,8	DESIGN ZONE	V3
PHYSICAL STATE AT THE PLANT	Gas	TUBE BOX / FILL WATER	150 kg
FLUID GROUP	1	ELECTRIC HEATER WEIGHT	300 kg
SUPERIORE LIMIT	0%	ASSEMBLY WEIGHT	800 kg
MAX LOAD	4,50 bar/ml	DESIGN PRESSURE	5 / -0,5 bar (*)
SERV LOAD	0%	SPRING PRESSURE	5,01 bar
JOINT EFFICIENCY	1	PLAN RATE	1500 kg/h
CORROSION THICKNESS	0 mm	DESIGN TEMPERATURE	20 / + 340°C
SHEAT / J MINIMUM DESIGN METAL TEMPERATURE	-40 °C / 0 °C (*)	INLET TEMPERATURE	300°C
HYDROTEST PRESSURE	1,3 PS	OUTLET TEMPERATURE	10°C
SHEAT / PRESSURE ALLOWABLE WITHOUT PRESSURE	5,0 MPa	HEAT CAPACITY	200 kW
CORT OF VESSEL/SHEAT	SL	FUEL	NATURAL GAS

DESIGN DATA / GENERAL DATA

REV.	DATE	DESCRIPTION	DWN.	APPR.
04	18/06/2018	MODIFIED AFTER CUSTOMER NOTES	P.Florian	P.Florian
03	22/05/2018	MODIFIED AFTER CUSTOMER NOTES	P.Florian	P.Florian
02	20/04/2018	MODIFIED HEATER CONTACT BOX	P.Florian	P.Florian
01	09/04/2018	MODIFIED AFTER CUSTOMER NOTES		
0	06/03/2018	FIRST ISSUE		

REVISIONS TABLE

PAINT, PREP. WELD + EXT TREATMENT	NO	PAINTING PREPARATION	as Sa 2½, ITM-PAINTING
PFHS, FINE FORMING + EXT TREATMENT	NO	PAINTING	ISO 12944/ISO 8501-1/-2/-3/ISO 8503/ISO 19840/ISO 8504
PS, PACKAGING, ENGRAVATION	100%	CUSTOMER CODE	2000000038-Rev.0
PT, PENETRANT EXC EXAMINATION	100%	Tank n°	100 number n°
PM, MAGNETOSCOPIC EXAMINATION	No	Job n°	0505131
RT, RADIOGRAPHIC EXAMINATION	0	Item n°	1
UT, ULTRASONIC EXAMINATION	0	DESIGN CONFIGURATION n°	1
HT, HEAT TREAT	570 ± 40°C	ARTICLE n°	1
PRESSURE + LEAK CHECK	NO	CUSTOMER : GE OIL & GAS NUOVO PIGNONE SrL	
HARDNESS TEST	NO	SUPPLIER, Masterwatt	
WELDING EXAMINATION AND PART		JOB DATA	

BHGE
Nuovo Pignone International S.r.l.

The document approval does not relief the vendor of his responsibility to meet all requirements of the purchase order

✓	A	Approved, proceed with fabrication
	CA	Conditionally approved, proceed, change as noted, revised issue
	RL	Released
	FI	Used for information only, no further action required
	R	Rejected; to be resubmitted for review
	C	Cancelled
	F	Final

Originator(BHGE): AA
Date: 20.06.18
Signature

REV.	DATE	CREATED BY	CHECKED BY	APPROVED BY	DESCRIPTION
04	18.06.2018	P.Florian	P.Florian		MODIFIED AFTER CUSTOMER NOTES
03	22.05.2018	P.Florian	P.Florian		MODIFIED AFTER CUSTOMER NOTES
02	20.04.2018	P.Florian	P.Florian		MODIFIED HEATER CONTACT BOX
01	09.04.2018	P.Florian	P.Florian		MODIFIED AFTER CUSTOMER NOTES
0	06.03.2018	P.Florian	P.Florian		FIRST ISSUE

PROPRIETARY AND CONFIDENTIAL

ORLEN Lietuva

PROJECT NAME: Propane Propylene Fraction (PPF) Splitter	SUBSUPPLIER INFORMATION:	CLIENT PROJECT NO.: OLP01011
CLIENT NAME: ORLEN Lietuva	LOCATION: Juodeikiai, Lithuania	GE INTERNAL PROJECT NO.: ICP-000037
REPLACES	SUPPLIER/CONTRACTOR IDENT NO.:	CLIENT PROJECT DOC NO.: OLP-01011-DP-M-GA800

BAKER HUGHES a GE company

TITLE ASSEMBLY DRAWING
Electrical Regeneration Gas Heater TK-442

DOCUMENT CODE: SOKXXXXXXX
REVISION: 4
REVISION DESCRIPTION: MODIFIED AFTER CUSTOMER NOTES
REVISION DATE: 09-Apr-18
APPROVED: Electronically Stored
CHECKED: Electronically Stored
DRAWN: 71001357
SECURITY CODE: N

SCALE	REPLACES/DERIVED BY	1:1 EXECUTION	ORIGINAL JOB	SIZE	LANGUAGE
N/A	N/A	06-Mar-18	0505131	1	A

SHEET 1 of 1

© 2017 Nuovo Pignone Tecnologie S.r.l., a Baker Hughes, a GE company, LLC ("BHGE") company. The information contained in this document is company confidential and proprietary property of BHGE or its affiliates. It is to be used only for the benefit of BHGE and may not be distributed, transmitted, reproduced, altered or used for any purpose without the express written consent of BHGE.